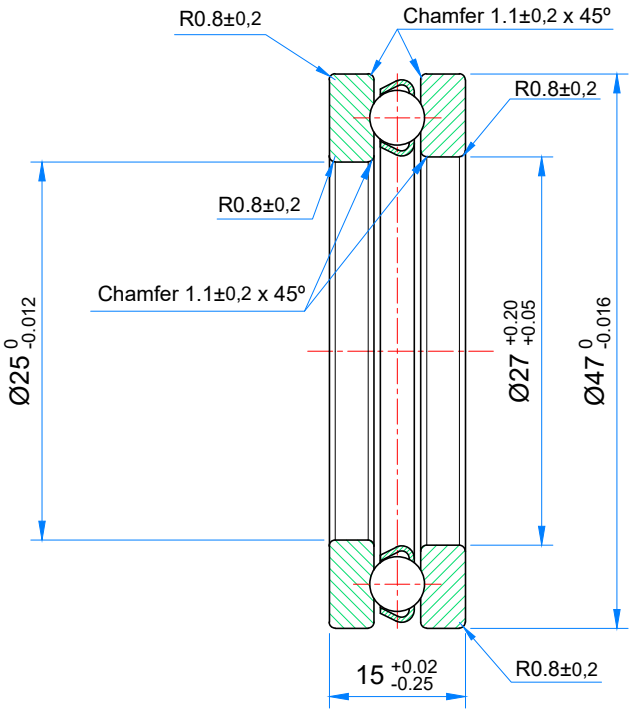

Section A-A

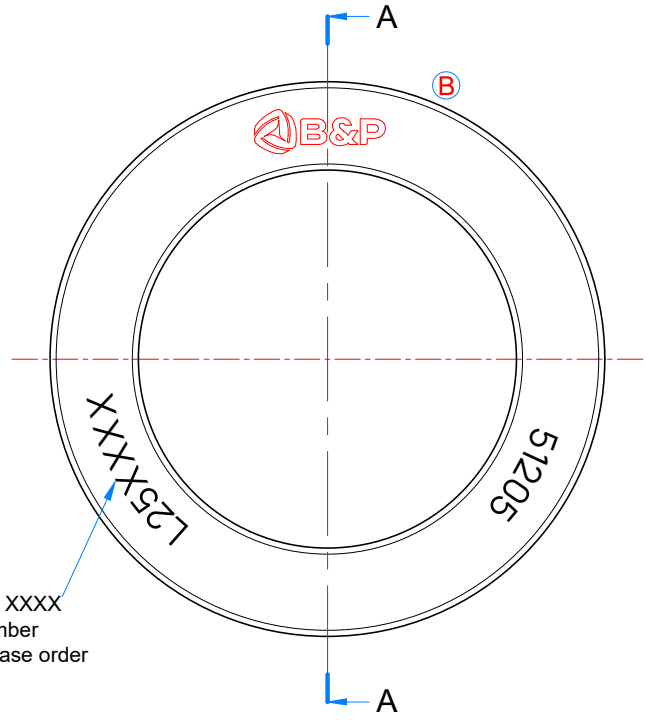

(TODAS LAS DIMENSIONES EN MILÍMETROS A MENOS QUE SE INDIQUE LO CONTRARIO)/(ALL DIMENSIONS ARE IN MILLIMETERS EXCEPT WHERE NOTED OTHERWISE)

Rev/Review	Descripción del cambio/Change Description	Dib/Made	Apr./Approval	Fecha/Date
B	Marking was changed	A.F	L.C	29/05/2025
A	Ball complement was changed	H.P	L.C	18/11/2021

NOTAS/NOTES:

Marking on bearing: " 51205 + B&P + L25XXXX " on face.
Ball complement: 13 x Ø7.938 (5/16")
Rings and ball material: SAE 52100 - H.T (58 - 64 HRc)
Retainer: Crowned steel cage

Ca: 27.8 KN
Coa: 50.4 KN

Rust preventative oiled
Packaging: Plastic tube or roll wrapped

OBSERV/OBSERVATIONS

Tolerancias(salvo especificación)/
Tolerances(unless otherwise noted)

Sin decimal/Without Decimal	X.	±0.1
Un decimal/One Decimal	X.X	±0.05
Dos decimales/Two Decimal	X.XX	±0.02
Ángulos/Angles		±0.5°

PO#1291

B&P motionsolutions

51205

PLANO PRODUCCIÓN/FACTORY PRINT

Código/Code:	195-51205	
	Fecha/Date	Nombre/Name
Dibujó/Made	14/04/2016	M.PORTMANN
Apr/Approved	14/04/2025	C.TORIGIAN
Rev/Review PO	29/05/2025	A.FARELEIRA
Escala/Scale:	NONE	
Mat/Material:	Ver NOTAS/see NOTES	
Trat. Térmico/ Heat treatment:	Ver NOTAS/see NOTES	
Rugosidad/ Roughness	Revisión/Review B	
Rev.rótulo/Review label	B	Fecha/Date 14/02/2022